NOTE:

1. KOR-N-SEAL NPC FLEXIBLE MULTI-PURPOSE CONNECTOR S106-7S SPECIAL TOOL REQUIRED FOR INSTALLATION

SIDE VIEW

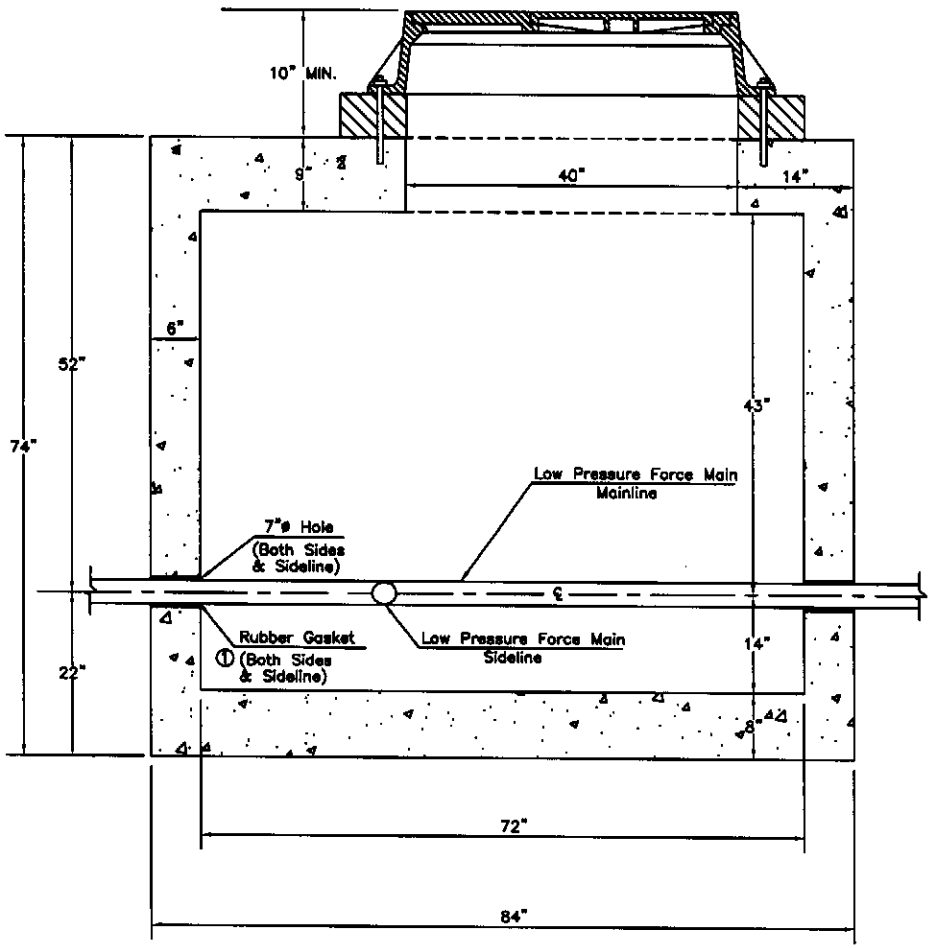

RIGHT TEE
TOP VIEW

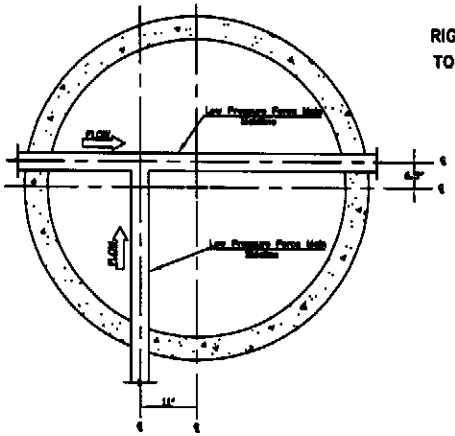

LEFT TEE
TOP VIEW

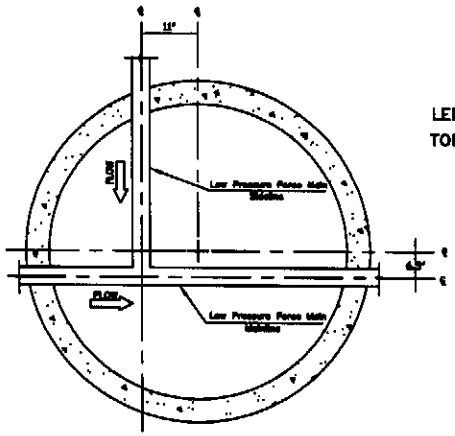

THE
METROPOLITAN SEWER DISTRICT
OF
GREATER CINCINNATI

TEE CHAMBER DETAIL
1" TO 3" LOW PRESSURE FORCE MAINS

LPFM04